卷册检索号 SEARCH NO. OF THE VOLUME
MLHVDC-LCS-ECI-DD-CS-0810 30-B003701S-T0810

图纸文件目录（首页）

CATALOG OF DRAWING DOCUMENTS (HEAD PAGE)

拉合尔±660kV换流站 工程 施工图 阶段
±660kV Lahore Converter Station PROJECT Detail Design DESIGN STAGE

结构 专业 第 08 卷 第 10 册
Structure SPECIALITY VOLUME BOOK

卷册名称 极2阀厅地坪沟道图
Volume name Foundation and trench on the ground floor of pole 2 valve hall

批 准 APPROVED BY	
审 核 REVIEWED BY	
设计/勘测 DESIGNED BY/ SURVEYED BY	18.08.30
图 纸 4 张 DRAWING NOS.	打印件 本 PRINTED COPIES NOS.

序号 No.	图 号 DRAWING NO.	文 件 名 称 DOCUMENT TITLE	版本 EDITION	张 NOS.	本 NOS.	备注 REMARKS
1	30-B003701S-T0810-001	极2阀厅换流变基础布置图 Layout plan of foundation and trench on the ground floor of pole 2 valve hall	A	1		
2	30-B003701S-T0810-002	阀厅地坪详图 Detail drawing of valve hall ground	A	1		
3	30-B003701S-T0810-003	风道基础详图 Detail drawing of underground air duck	A	1		
4	30-B003701S-T0810-004	电气设备支架详图 Detail drawing of electrical equipment support	A	1		

注:

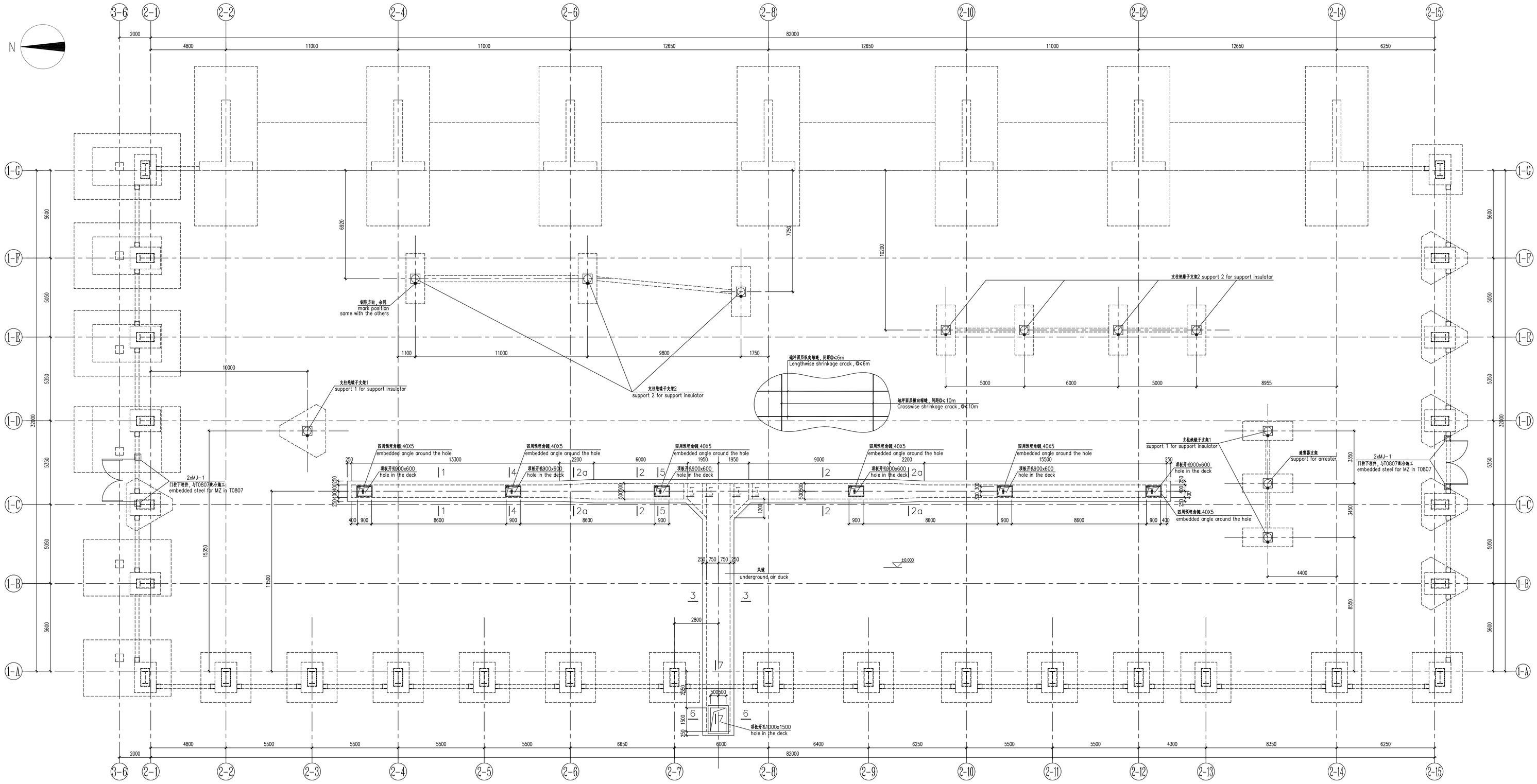

极2阀厅地坪设备基础及沟道布置图

Layout plan of equipment foundation and trench on the ground floor of pole 2 valve hall

附注：

1. 室内±0.000相当于绝对标高193.90(EGM2008高程系统)。如无特别说明，本工程标高均采用相对标高。
2. 如无特别说明，本工程图纸所注尺的长度单位为毫米(mm)，标高单位为米(m)。
3. 混凝土
   风道侧壁及底板采用fc'=28MPa防水混凝土，抗渗等级P6；
   垫层混凝土，阀厅地坪及屏蔽网层混凝土fc'=21MPa。
4. 钢筋
   Φ表示Grade40(fy=280MPa)钢筋，Φ表示Grade60(fy=420MPa)钢筋，钢筋应符合标准ASTM A615 or ASTM A706的规定。
   焊接和焊条满足美标AWS D1.1M-2010及AWS D1.4-2011的相关要求。
5. 钢材
   钢板、角钢和扁钢采用Q235B。
6. 最外层钢筋的混凝土保护层厚度：
   阀厅地面：顶层钢筋25mm；底层钢筋50mm.
   风道侧壁和底板均为50mm.
7. 混凝土配合物应符合ACI 318-14表19.3.2.1对应于暴露等级S1的水泥种类要求。
8. 除注明外，≤No.19钢筋锚固长度不小于38d，≥No.22钢筋锚固长度不小于47d，d为钢筋直径。
9. 地基承载力特征不小于70kPa，超挖部分采用级配碎石回填，分层压实，压实系数≥0.95。
10. 所有外露铁件均采用热镀锌防腐，现场焊接部位采用冷喷锌防腐。
11. 纵向缩缝间不得放置任何隔离材料，浇筑时互相紧贴，拆模时混凝土强度不小于3MPa。阀厅面层纵向缩缝间距应不大于6m，面层横向缩缝间距应不大于10m，阀厅地坪施工应采用间隔分区施工，确保混凝土浇注和养护质量。
12. 阀厅地坪施工时，应注意施工电气屏蔽网，不得遗漏，屏蔽网在混凝土保护层内，不得中断。地面屏蔽网采用焊接连接，搭接长度不小于100mm。地面屏蔽网与墙面连接详图见阀厅建筑图相关图纸。
13. 阀厅地面有电气埋管穿过风道，地坪沟道施工时应配合电气图纸预埋电气埋管。电缆转弯转弯半径为10倍的管径，管口打磨光滑无毛刺，风道洞口设钢格栅盖板，需设置接地点，采用40*4扁铁就近接入阀厅地下主接地网。
14. 风道内壁要求光滑，先涂水泥基防水涂料一遍，再涂防霉防尘涂料两遍。
15. 阀厅墙体与地面及勒脚连接详建筑图。
16. 1-1~7-7剖面见-03图。

Specification：

1. The indoor elevation of ±0.000 is equal to the absolute elevation of 193.90 (geodestic datum system EGM2008). If not specified,the elevations of the project are adopt to the relative elevation.
2. Unless otherwise specified, the length of the drawings is in millimeters (mm) and the elevation is in meters (m).
3. Concrete
   Underground air trench fc'=28MPa, Seepage resistance grade P6;
   bedding cushion concrete, ground concrete, shield concrete, fc'=21MPa.
4. Steel bars
   Φ represents the steel reinforcement of Grade40(fy=280MPa) and Φ represents Grade60(fy=420MPa). Steel bars should conform to ASTM A615 or ASTM A706.
   Electroding and welding should meet the request of American standards AWS D1.1M-2010 and AWS D1.4-2011.
5. Steel
   The structural carbon steel , grade Q235B, should be used for steel plate, angle steel and steel strip.
6. Concrete cover for rebar thickness: top surface of floor 25mm; undersurface of floor 50mm; foundation, trench 50mm.
7. Concrete mixtures shall conform to exposrue grade S1 requirements in ACI 318-14 Table 19.3.2.1.
8. Unspecified anchorage length of rebars should no less than 38d for rebars ≤No.19, or 47d for rebars ≥No.22, d is the diameter of anchored rebars.
9. Ground bearing pressure ≥70kPa,the gap between blinding layer and natural floor should be refilled with graded gravel and tamped by layers,the compacting factor should be more than 0.95.
10. All structural steel should be galvanized.
11. Nothing is permitted to be put inside the lengthwise shrinkage crack, the strength of concrete should be no less than 3 MPa. The distance between two lengthwise shrinkage crack shoud be less than 6 meters while the crosswise shrinkage crack should be less than 10 meters, the floor for the valve hall can be constructed from one area to another, the construction quality of casting and caring should be assured.
12. During the construction of the floor, do not forget to build the steel mesh inside for RFI shielding, the steel mesh should not be interrupted and the steel mesh can be welded, the lap length is no less than 100mm, The details of the connection between the steel mesh and wall are shown in relative architecture drawings.
13. Under the floor, there are some embedded pipes for the cables crossing the underground air trench, please check the relative electric drawings. The radius of turning circle is no less than 10-times the radius of pipe, the pipe orifice should be polished smoothly without burr, above the reserved hole for ventilation there are some steel grill covers where should be set earth points, the earth points can be connected to the nearby main grounding network by 40*40 band iron.
14. The inner side of the underground air trench should be smooth,there are one coat polyurethane water-proof coating and two coats anti-mildew and dustproof paint.
15. The detail of the wall foot and the conection between the wall and the floor are shown in relative architecure drawings.
16. Section drawing 1-1~7-7 see drawing -03.

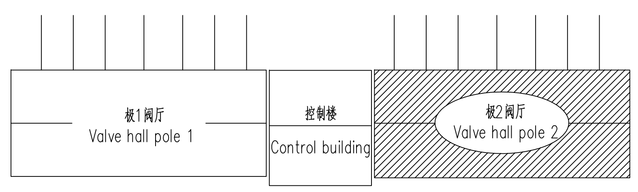

Reference Drawings	
Drwg. No.	Title

Revisions				
A	宫郡郡	2018.08.30	First issue	
	Name	Date	Notes	

巴基斯坦联络至里—拉合尔±660kV直流输电工程
±660kV HVDC Project from Matiari to Lahore in Pakistan

NATIONAL TRANSMISSION & DESPATCH COMPANY (NTDC) LIMITED PAKISTAN

CONTRACTOR 国家电网 State Grid 中国电力技术装备有限公司

SUBCONTRACTOR East China Electric Power Design Institute Co.,Ltd.

拉合尔±660kV换流站
±660kV Lahore Converter Station

设计阶段 PHASE | 施工图 Detail Design

M L H Y D C - L C S - E C I - D D - C S - 0 8 1 0 - 0 0 1 A

	姓名 Name	日期 Date
设计 Designed	宫郡郡	2018.08.30
校核 Checked	史武峰	2018.08.30
审核 Reviewed	刘洲城	2018.08.30
批准 Approved	郑烨	2018.08.30

专业 Speciality	会签 Sign	日期 Date
暖通	孙志	
电气	刘洲城 郑烨	

比例 Scale

极1阀厅地坪设备基础及沟道布置图
Layout plan of foundation and trench on the ground floor of pole 2 valve hall

图号 DWG. NO. 30-B003701S-T0810-001

版本 REV. A

A0(1189x841)

(1) 1mm thick self-leveling epoxy colophony floor coating (after final installed);	(1)1厚环氧树脂工业自流平工业地坪涂料面涂(最终安装之后);
(2) 2mm thick self-leveling epoxy colophony floor coating (before final installed);	(2)2厚环氧树脂工业自流平工业地坪涂料面涂(最终安装之前);
(3) Two coats repair putty of self-leveling epoxy colophony, with surface polished smooth;	(3)环氧树脂工业自流平工业地坪配套修补腻子2道，表面打磨平整;
(4) Two coats seal primer of self-leveling epoxy colophony;	(4)环氧树脂工业自流平工业地坪配套渗透封闭底漆2道;
(5) One coat of 801 glue cement grout (ratio of 801 glue to water is 1:4);	(5)刷801胶素水泥浆一遍(配合比为801胶：水=1：4);
(6) 80mm thick fc'=21MPa(compressive strength is 3000psi)concrete (mixed with 0.9kg/m³ anti-concrete cracking fiber)with galvanized steel mesh Φ4mm@50mm×50mm inside for RFI shielding; floor surface roughness ≤0.05%, tolerance ±0.5mm; Separation details refer to the floor channel diagram in structure drawing;	(6)80厚mm厚fc'=21MPa(抗压强度3000psi)混凝土(内掺0.9kg/m³防裂纤维素纤维)夹Φ4mm@50mm×50mm镀锌焊接钢丝屏蔽网；地坪表面平整度≤0.05%，允许偏差±0.5mm;
(7) Two coats 1.5mm thick polyurethane water-proof coating (should be painted along the wall to make sure the top is higher than floor finishing level);	(7)1.5厚聚氨酯防水涂料两道(沿墙上至室内建筑完成面);
(8) 200mm thick fc'=21MPa(compressive strength is 3000psi)concrete with ⌀13mm steel bar @150mm×150mm two layers square mesh, connected with -40mm×5mm hot-dip galvanized steel belt above the ground every 5m along the ground edge in order to connect with earthing line; Separation details refer to the floor channel diagram in structure drawing;	(8)200厚fc'=21MPa(抗压强度3000psi)混凝土配⌀13@150X150双层双向钢筋网(沿阀厅地面四周每隔5m采用40x5热镀锌扁钢引出地面以上，以便与阀厅接地干线进行连接);
(9) 100mm thick fc'=21MPa(compressive strength is 3000psi)concrete cushion;	(9)100厚fc'=21MPa(抗压强度3000psi)混凝土垫层;
(10) Rammed earth, compacting factor λc≥0.95.	(10)素土夯实，压实系数λc≥0.95。

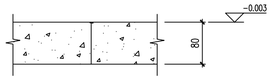

纵向缩缝大样

Lengthwise shrinkage crack

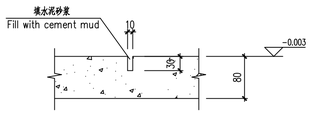

横向缩缝大样

Crosswise shrinkage crack

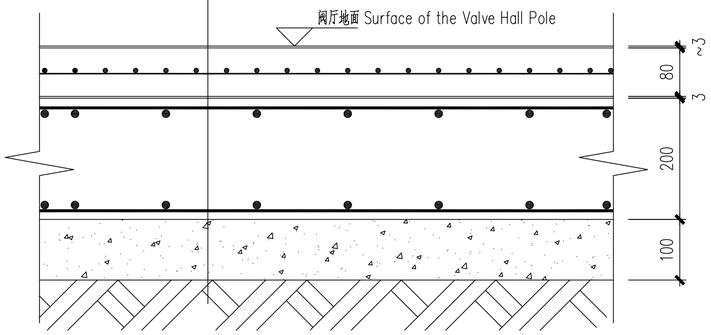

阀厅地面做法

The ground of the Valve Hall Pole

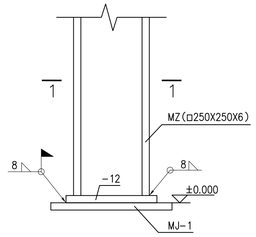

门柱(MZ)柱脚

footing for MZ

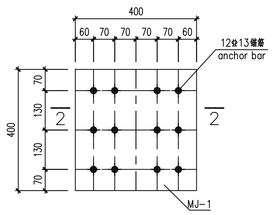

MJ-1

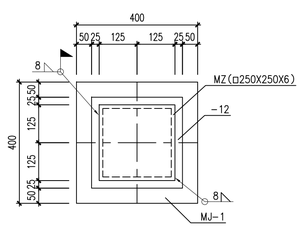

1-1

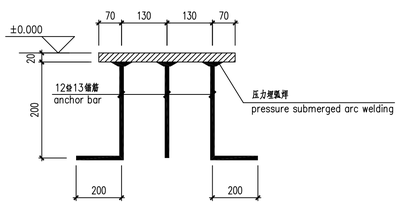

2-2

Reference Drawings

Drwg. No.	Title

Revisions

	Name	Date	Notes
A	官恩懿	2018.08.30	First issue

巴基斯坦默蒂亚里—拉合尔±660kV直流输电工程

±660kV HVDC Project from Matiari to Lahore in Pakistan

NATIONAL TRANSMISSION & DESPATCH COMPANY (NTDC) LIMITED PAKISTAN

CONTRACTOR 国家电网 STATE GRID 中国电力技术装备有限公司 CHINA ELECTRIC POWER EQUIPMENT AND TECHNOLOGY CO.,LTD.

SUBCONTRACTOR East China Electric Power Design Institute Co.,Ltd.

拉合尔±660kV换流站

±660kV Lahore Converter Station

设计阶段 PHASE: 施工图 Detail Design

M L H V D C - L C S - E C I - D D - C S - 0 8 1 0 - 0 0 2 A

	姓名 Name	日期 Date
设计 Designed	官恩懿	2018.08.30
校核 Checked	金成峰	2018.08.30
审核 Reviewed	王刚	2018.08.30
批准 Approved	赵刚	2018.08.30
比例 Scale		图号 DWG NO.

阀厅地坪详图

Detail drawing of valve hall ground

30-B003701S-T0810-002

版本 REV. A

A1(841x594)

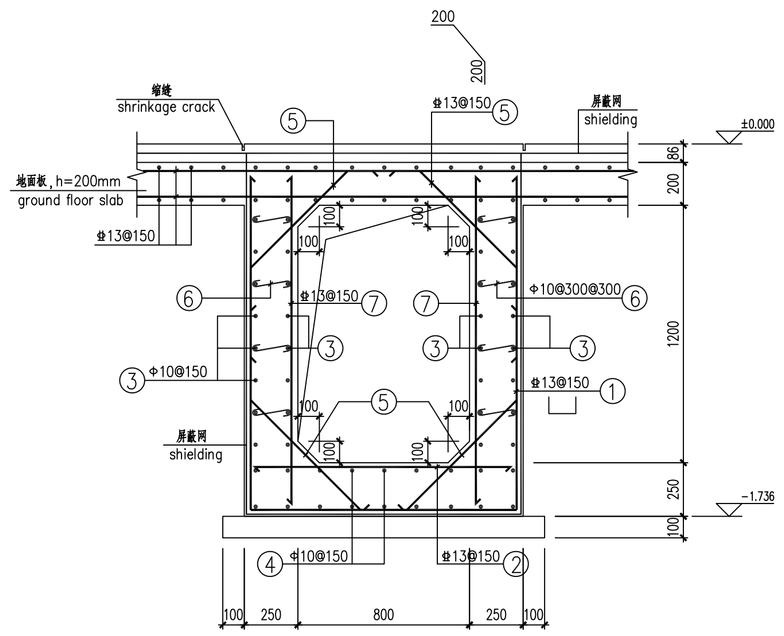

1-1

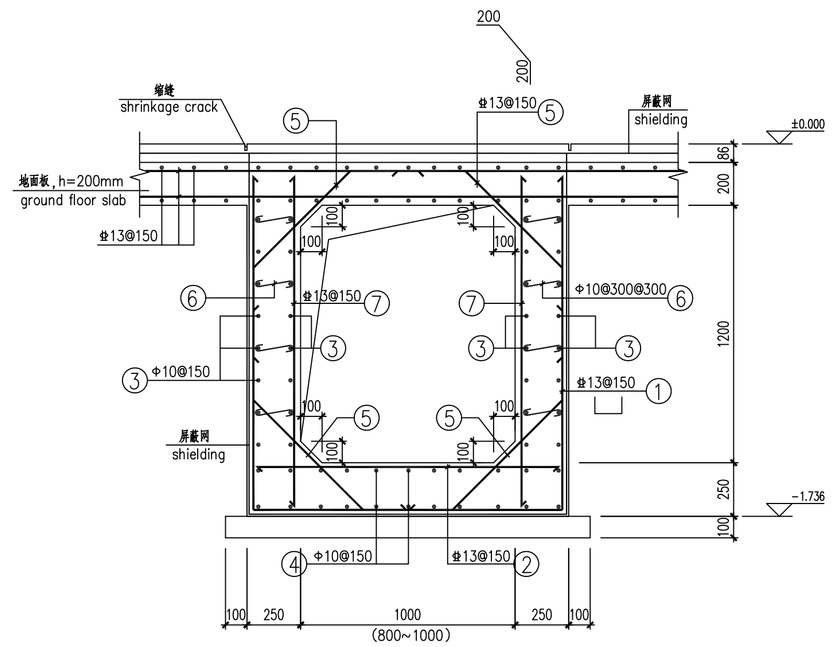

2-2
(2a-2a)

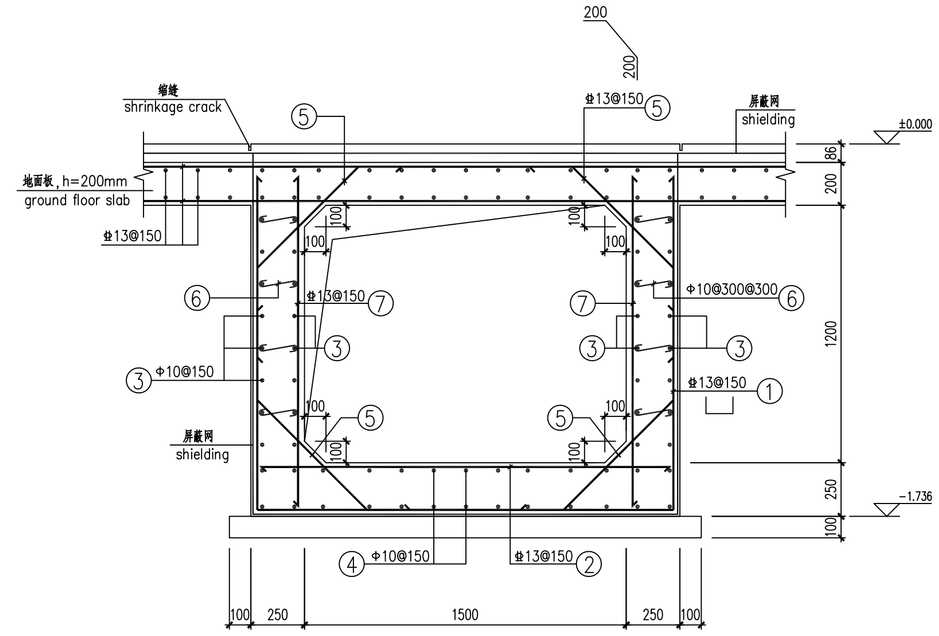

3-3

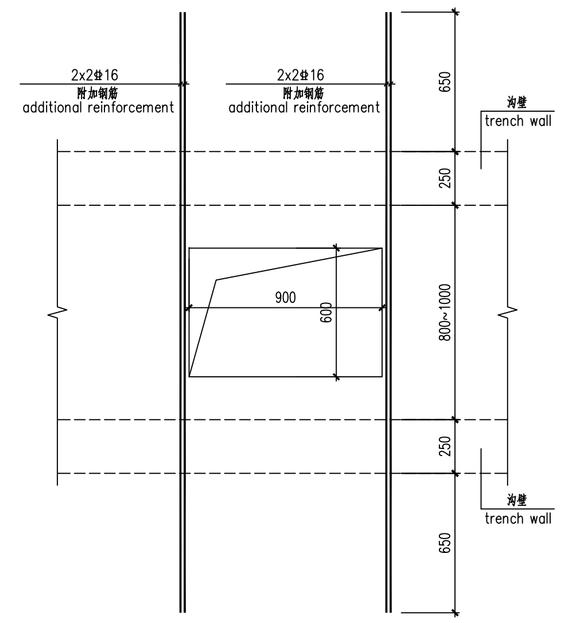

风道基础板顶开孔加固详图

additional reinforcement for hole in the deck

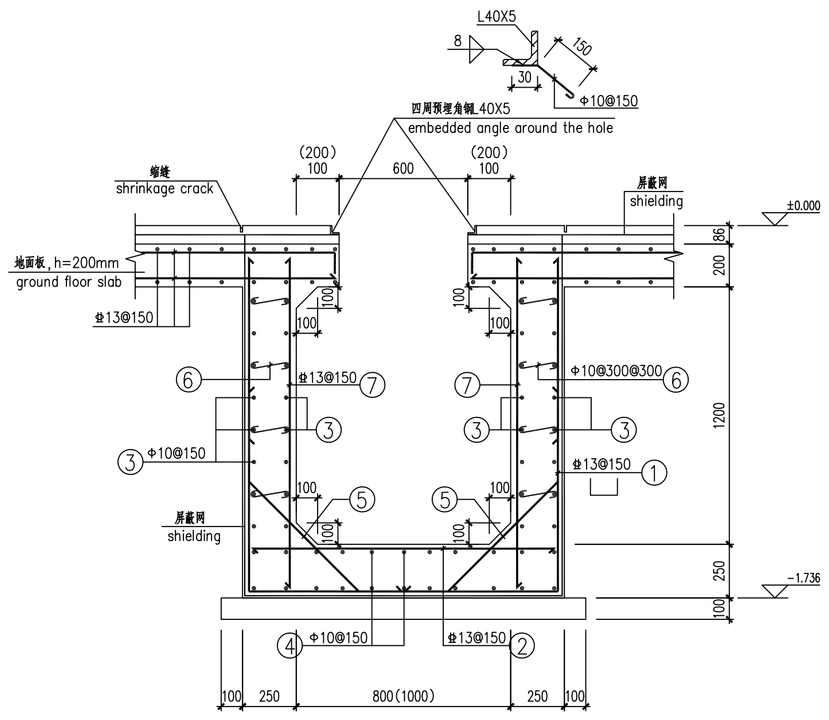

4-4
(5-5)

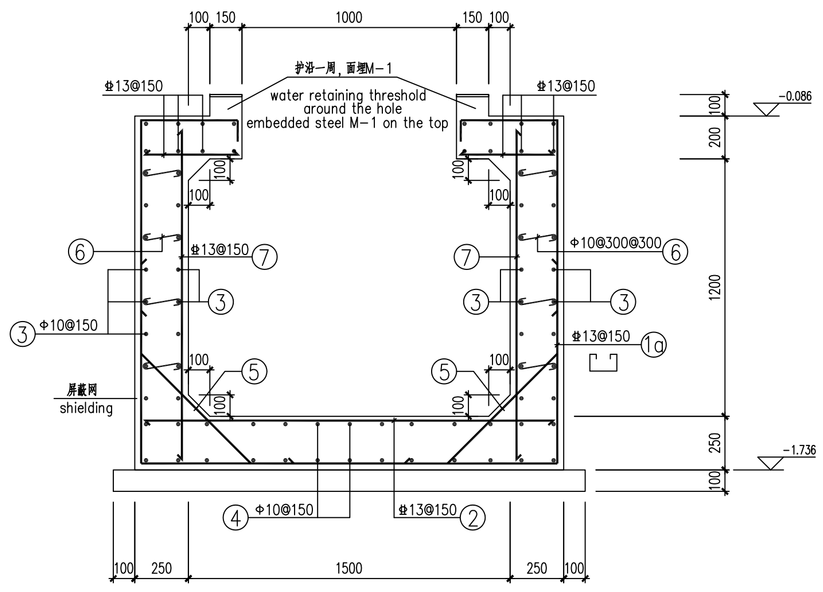

6-6

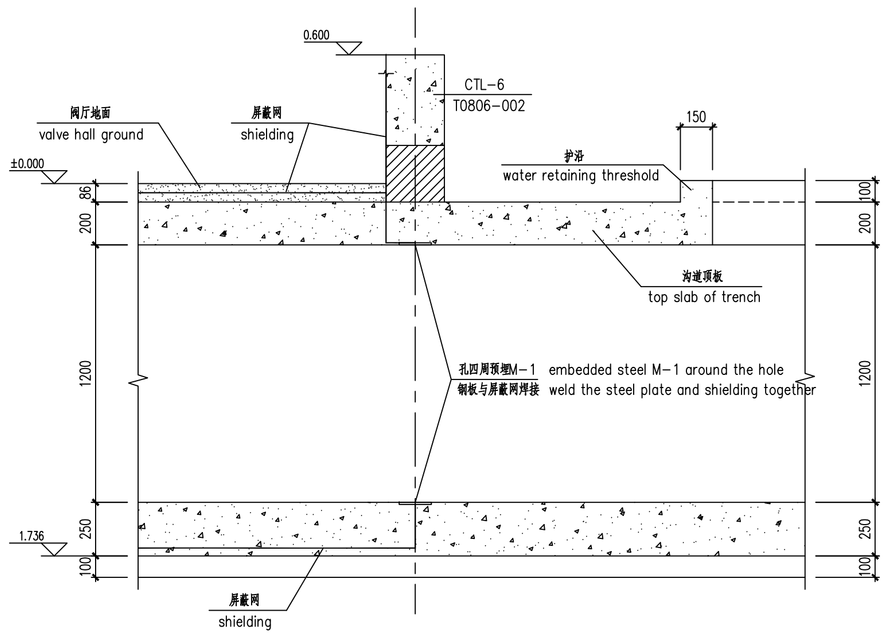

7-7

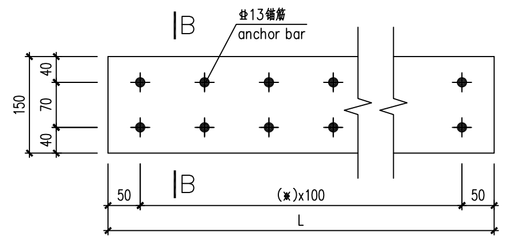

M-1

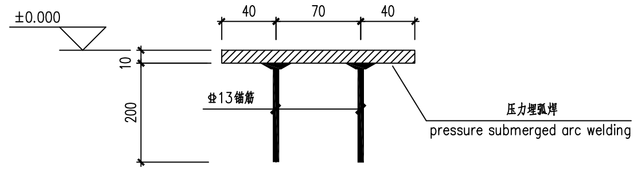

B-B

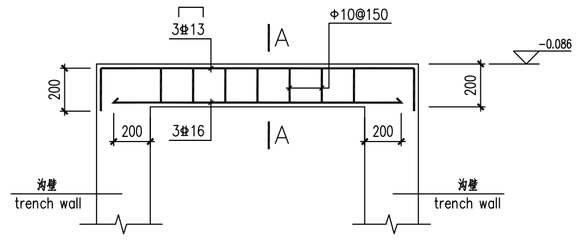

L-1

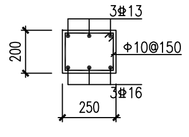

A-A

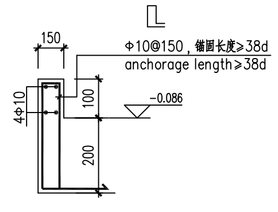

护沿详图

detail for water retaining threshold

Reference Drawings	
Drwg. No.	Title

Revisions				
	A	宫思懿	2018.08.30	First issue
		Name	Date	Notes

巴基斯坦默蒂亚里—拉合尔±660kV直流输电工程

±660kV HVDC Project from Matiari to Lahore in Pakistan

NATIONAL TRANSMISSION & DESPATCH COMPANY (NTDC) LIMITED PAKISTAN

CONTRACTOR 国家电网 STATE GRID 中国电力技术装备有限公司 CHINA ELECTRIC POWER EQUIPMENT AND TECHNOLOGY CO.,LTD.

SUBCONTRACTOR East China Electric Power Design Institute Co.,Ltd.

拉合尔±660kV换流站

±660kV Lahore Converter Station

设计阶段 PHASE: 施工图 Detail Design

M L H V D C - L C S - E C I - D D - C S - 0 8 1 0 - 0 0 3 A

	姓名 Name	日期 Date
设计 Designed	宫思懿	2018.08.30
校核 Checked	宫思懿	2018.08.30
审核 Reviewed	王明山	2018.08.30
批准 Approved	王明山	2018.08.30
比例 Scale		图号 DWG NO.

风道基础详图

Detail drawing of underground air duck

30-B003701S-T0810-003

版本 REV. A

暖通	孙孟	
专业 Speciality	会签 Sign	日期 Date

A1(841x594)

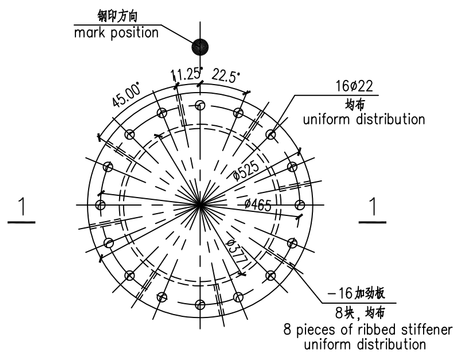

支柱绝缘子支架1

support 1 for support insulator

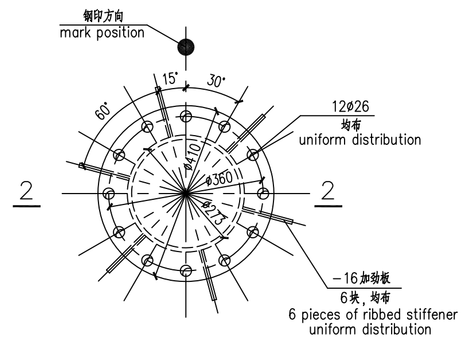

支柱绝缘子支架2

support 2 for support insulator

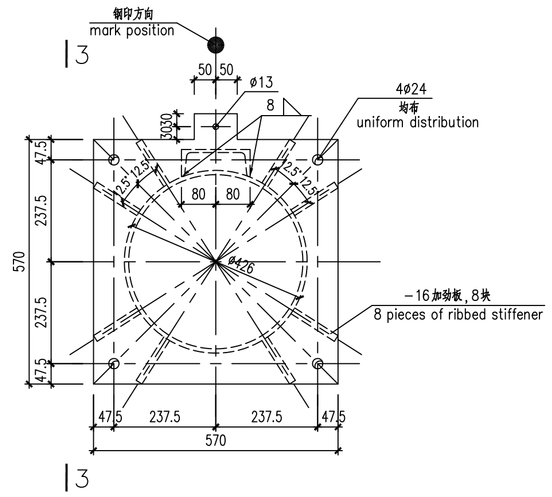

避雷器支架

support for arrester

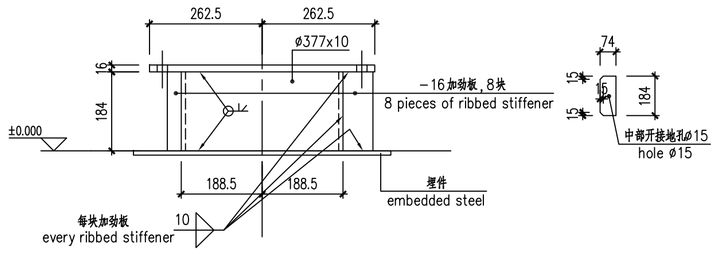

1-1

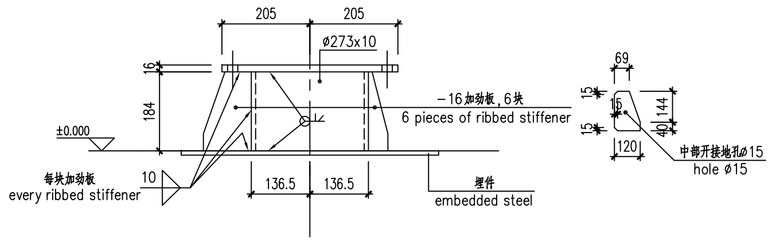

2-2

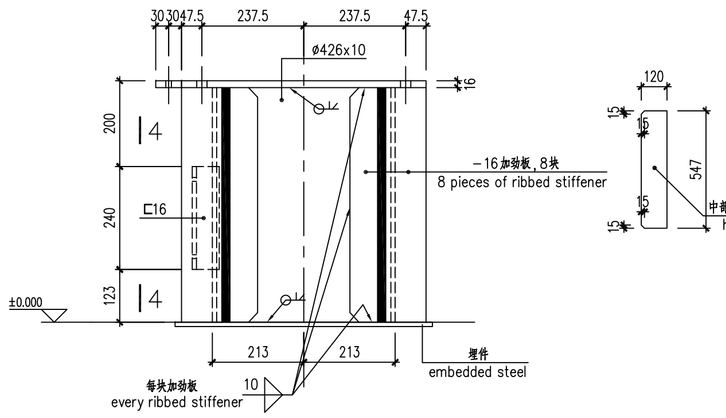

3-3

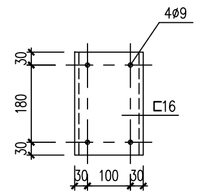

4-4

附注：

1. 施工时应注意设备支架方向。
2. 所有焊缝均为连续满焊。

Specification :

1. Make sure the direction of the equipment support is right before construction.
2. All weld beads are continuous.

Reference Drawings

Drwg. No.	Title

Revisions

	Name	Date	Notes
A	宫思懿	2018.08.30	First issue

巴基斯坦默蒂亚里—拉合尔±660kV直流输电工程

±660kV HVDC Project from Matiari to Lahore in Pakistan

NATIONAL TRANSMISSION & DESPATCH COMPANY (NTDC) LIMITED PAKISTAN

CONTRACTOR 国家电网 STATE GRID 中国电力技术装备有限公司 CHINA ELECTRIC POWER EQUIPMENT AND TECHNOLOGY CO.,LTD.

SUBCONTRACTOR East China Electric Power Design Institute Co.,Ltd.

拉合尔±660kV换流站

±660kV Lahore Converter Station

设计阶段 PHASE: 施工图 Detail Design

M L H V D C - L C S - E C I - D D - C S - 0 8 1 0 - 0 0 4 A

	姓名 Name	日期 Date
设计 Designed	宫思懿	2018.08.30
校核 Checked	金沃源	2018.08.30
审核 Reviewed	邵明祖	2018.08.30
批准 Approved	郑煜	2018.08.30
比例 Scale		图号 DWG NO.

电气设备支架详图

Detail drawing of electrical equipment support

30-B003701S-T0810-004

版本 REV. A

电气	武峡坪 郑煜	
专业 Speciality	会签 Sign	日期 Date

A1(841x594)